City of San Jose - PBCE – Planning Division - Imaging Index Cover Sheet

Address/Location: **1371 KOOSER ROAD**

Permit/Project No.: **AD06-408** Issuance Date: **04/24/06**

Prepped By: **BSCOTT** Closed By: **SFAUMUI** RSN: **1228891**

Category	Document Type	Sub Document Type
☐ (EF) Environmental Files (203)	☐ (PP) Public Project Files (203-03)	☐ (EN) EIR ☐ (DA) Approved Document ☐ (EM) Maps ☐ (AE) Application ☐ (AG) Agency Correspondence ☐ (EG) General Correspondence ☐ (TR) Technical Reports ☐ (RE) Archaeological Reports ☐ (EP) Plans
☐ (GP) General Plan (204)	☐ (GA) General Plan Amendments (204-02)	☐ (AM) Amendment ☐ (AA) Application ☐ (CG) Correspondence
	☐ (GE) Environmental Review (for 204 series GP Amendments)	☐ (GD) Approved Document ☐ (GI) EIR ☐ (GS) Supporting Documents ☐ (GT) Technical Reports ☐ (GR) Archaeological
☒ (DR) Development Review (207)	☐ (PR) Projects (207-02, 207-03, etc.)	☐ (ZN) Zoning ☐ (PE) Permit ☐ (MP) Maps ☐ (AP) Application ☐ (AC) Agency Correspondence ☐ (GC) General Correspondence ☐ (PL) Plans
	☐ (ER) Environmental Review (for 207 series Project Files)	☐ (EA) Approved Document ☐ (EI) EIR ☐ (ES) Supporting Documents ☐ (ET) Technical Reports ☐ (AR) Archaeological
	☒ (AD) Adjustments (207-12)	☐ (DO) Documents ☒ (PA) Plans
	☐ (PI) Public Info Letters (207-29)	☐ (LE) Letter ☐ (LS) Supporting Docs

AD 06-408

STANWOOD DRIVE

EXISTING DRIVEWAY

EXISTING DRIVEWAY

EXISTING DRIVEWAY

EXISTING PARKING STALLS

EXISTING ASPHALT

EXISTING ADJACENT RETAIL

CHUCK E. CHEESE'S BUILDING 18,343 SQ.FT.

EXISTING PARKING STALLS

EXISTING PARKING STALLS

EXISTING PARKING STALLS

EXISTING PARKING STALLS

EXISTING DRIVEWAY

EXISTING PARKING STALLS

EXISTING PARKING STALLS

EXISTING CONC WALK

H.C. PATHWAY

G.C. TO INSTALL SHRUB/TREE AT TIME OF DOOR INSTALLATION (NOT TO EXCEED 10'-0" HEIGHT AND TYPE)

LOCATION OF NEW EXIT DOOR, SEE A2.0.

EXISTING CONC. WALK

16 A6.0

20 A6.0

EXISTING ASPHALT

CITY OF SAN JOSE
Department of Planning, Building & Code Enforcement
File No.: AD06-408
By: Brian Grant 4/21/06 DATE
See attached Development Permit Adjustment sheet for conditions of approval.
Note: A Building Permit may also be required. Please check with the Building Division.

New emergency exit door as reqd. by fire dept match exist. Add two dwarf trees as shown.

EXISTING DRIVEWAY

EXISTING GAS STATION

KOOSER ROAD

EXISTING DRIVEWAY

EXISTING PARKING STALLS

APPROXIMATE LOCATION OF EXISTING PYLON SIGN

NOT A PART

LEGEND

BUILDING

HANDICAP ACCESSIBLE ROUTE

01 EXISTING PARTIAL SITE PLAN SCALE: 1" = 10'

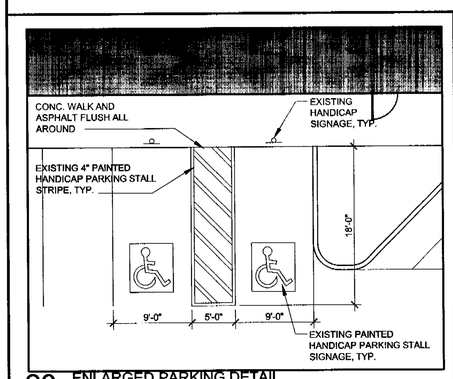

20 ENLARGED PARKING DETAIL
RE: 01/A6.0 SCALE: 1/8"=1'-0"

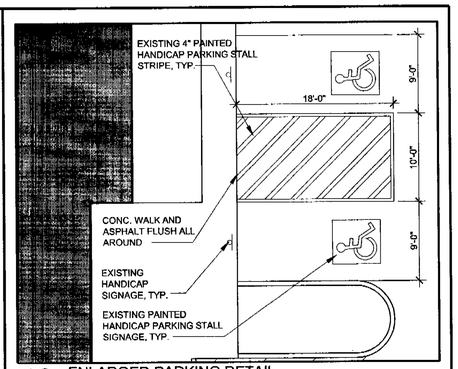

16 ENLARGED PARKING DETAIL
RE: 01/A6.0 SCALE: 1/8"=1'-0"

REVISED PERMIT SET - DATED: 04/10/2006

7535 East Hampden Avenue
Suite 425
Denver, Colorado 80231
(303) 743-0002
CAHEN ARCHITECTURAL GROUP P.C.

CAHEN ARCHITECTURAL GROUP P.C.
Copyright

Exp 5-31-07
LICENSED ARCHITECT CRAIG I. CAHEN No. C-27916 Reg. 5/31/07 CALIFORNIA

These plans are an instrument of service and are the property of the Architect, and may not be duplicated, disclosed, or reproduced without the written consent of the Architect. Copyrights and Infringements will be enforced and prosecuted.

#404 SAN JOSE, CA
BUILDING REMODEL
CHUCKE CHEESE PIZZA RESTAURANT
1371 Kooser RD San Jose, CA 95118

CHUCKECHEESE'S

DATE	•	9/10/04
PROJ NO.	•	24943
DRAWN	•	JNL
CHECKED	•	CIC
ISSUED/REVISED	•	DATE
PERMIT		01/31/05
REVISION	02	10/10/05
REVISION	03	12/13/05
REVISION	04	04/10/06
DRAWING TITLE	•	
~~ACCESSIBILITY SITE PLAN~~		

A6.0

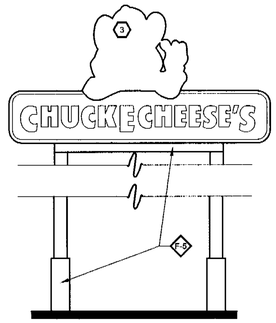

17 POLE SIGNAGE DETAIL

RE: - SCALE: 3/16"=1'-0"

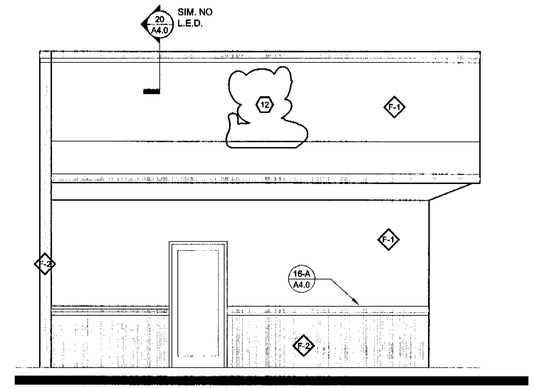

02 SIDE ELEVATION

SCALE: 1/4"=1'-0"

DIMENSIONS FOR PRICING ONLY, G.C. TO FIELD VERIFY.

3'-1" 3'-1" 5'-6" 8'-2 1/2" 5'-6" 5'-6" 8'-2 1/2" 5'-6" 5'-1" 11'-6 1/2" 5'-1" 5'-6" 9'-5" 5'-6" 3'-1" 3'-1"

SIM. NO L.E.D. — 20 A4.0 — 16-D A4.0 — 16-A A4.0 — 16-B A4.0 — SIM. — 02 A4.0

NEW STANDARD CHUCK E SIGNAGE TO BE INCREASED BY 25% TO 7'-6" HIGH

CHUCKE CHEESE'S

EQ. — F-1 — F-2 — 1 — 2 — 4 — 5 — 11 — 14 — 6 — 1371

REMOVE EXISTING TILE, PATCH AND REPAIR AS NEEDED

REMOVE EXISTING STORE FRONT DOORS, REPLACE WITH STANDARD RED METAL DOOR PER C.E.C. ALONG WITH NEW HARDWARE.

01 FRONT ELEVATION

SCALE: 1/4"=1'-0"

CITY OF SAN JOSE
Department of Planning, Building & Code Enforcement
File No.: AD06-408
By: [signature] 5/24/06 DATE
See attached Development Permit Adjustment sheet for conditions of approval.
Note: A Building Permit may also be required. Please check with the Building Division.

REVISED PERMIT SET - DATED: 04/10/2006

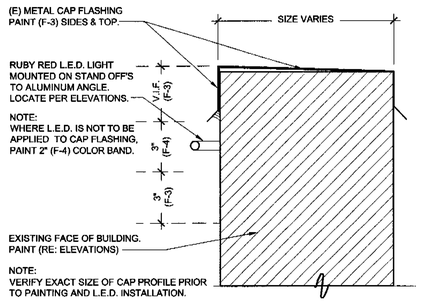

20 TYPICAL PAINTED CAP FLASHING DETAIL

RE: ELEVATION 1 SCALE: 3"=1'-0"

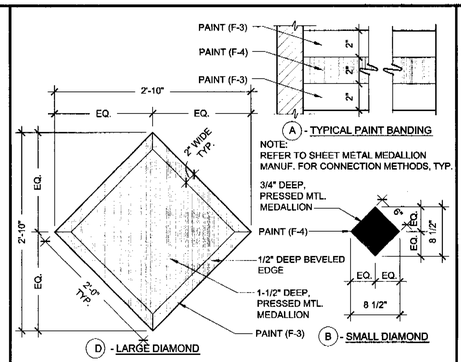

16 EXTERIOR DIAMONDS & PAINT BANDING DETAIL

RE: ELEVATION 1 SCALE: 1"=1'-0"

TAG	MANUFACTURER	COLOR
F-1	SHERWIN WILLIAMS	SAND - SW 2059
F-2	SHERWIN WILLIAMS	CANOE - SW 2043
F-3	SHERWIN WILLIAMS	AUGUST MOON - SW 2199
F-4	SHERWIN WILLIAMS	HOLLYBERRY RED - SW CUSTOM
F-5	SHERWIN WILLIAMS	BLACK - EXTERIOR PAINT

12 EXTERIOR FINISH SCHEDULE

RE: ELEVATION 1 SCALE:

EXTERIOR NOTES and REFERENCE:

1. **SIGNAGE - NEW LOGO & LETTERS:** Provide new illuminated Chuck E Logo signage (increase size by 25%) Signage company as selected by C.E.C. to provide, fully install and arrange all permitting of signage accordingly, prior to installation.
2. **SIGNAGE - REPLACE LETTERS:** Re-face existing illuminated Chuck E Cheese vinyl lettering with new solid red vinyl. All metal edges of signage can to be prepped and painted Sherwin Williams 'Safety color' Black, Gloss finish, with existing L.E.D. to be replaced with L.E.D.. Signage Company as selected by C.E.C. to provide, fully install and arrange all permitting accordingly, prior installation.
3. **SIGNAGE - MONUMENT:** Existing illuminated signage to be re-faced per sign company specifications and installation instructions unless noted otherwise. All metal edges/sides of signage and poles to be painted (F-5).
4. **AWNINGS:** Existing awning to be re-covered per sign company specifications and installation instructions. Purple field color with 8" red lower band. Paint all metal awning framework to match awning colors (purple and red) where framework is visible from underside.
5. **WINDOWS:** Existing storefront windows and window framing to be cleaned and left unpainted 'both sides', unless noted otherwise, once exterior painting is completed. If windows have wood trim, Paint (F-2)
6. **STOREFRONT DOORS:** Existing storefront doors and door framing to be cleaned and left unpainted 'both sides', unless noted otherwise, once exterior painting is completed. If doors have wood trim, Paint (F-2).
8. **PAINTED FEATURES:** All new and existing down spouts, scuppers, electrical panels, grills, conduit and piping, visible to public, to be paint finished to match adjacent material finish and banding, unless noted otherwise.
9. **UNPAINTED ITEMS:** Do not paint over security cameras, security/fire alarm bells and associated pumps fixtures fittings and other life safety fixtures. Do not paint over electrical and plumbing labels.
11. **LIGHTING:** All new diamond & rectangular box style wall sconce lights as specified by C.E.C. Entertainment Inc. center of fixture to match entry door height. U.N.O. All to be painted (F-4) including existing.
12. **SIGNAGE - REPLACE LOGO:** Re-face existing illuminated Chuck E Logo vinyl graphic with new Chuck E Logo. All metal edges of signage can to be prepped and painted Sherwin Williams 'Safety color' Black, Gloss finish, with existing L.E.D. to be replaced with L.E.D.. Signage company as selected by C.E.C. to provide, fully install and arrange all permitting accordingly, prior to installation.
13. **PAINT FINISH:** All painted Brick, Block, and Wood, and all E.I.F.S. to have Satin Finish. All painted metal surfaces to have semi-gloss finish. Refer to A0.0 Paint Notes for detailed paint specifications and surface preparations.
14. **HOURS SIGNAGE:** Attach new or remove and repaint existing sign background (F-4).
15. **ELECTRICAL:** Contractor to provide all necessary j-boxes, transformers and electrical feeds to new and relocated lighting and signage.
16. **LIGHT BULBS:** All existing light fixtures to be lamped per light schedule provided by C.E.C. Entertainment Inc.
17. **PATCH & REPAIR:** Contractor to remove J-boxes, pull unused wire and patch and repair wall to match adjacent wall surface where lighting, power or signage is to be demolished or relocated. Any unwanted Cracks and gaps to be filled, primed and finished to match adjacent material.

LIGHTING LEGEND:
Indicates location and extent of lights, per Lighting company Specifications.

Red Back-lit Diamond wall sconce Light

Red Box, Rectangular wall sconce light.

Red L.E.D.

08 EXTERIOR - GENERAL NOTES

RE: ELEVATION 1 SCALE:

CAHEN ARCHITECTURAL GROUP P.C.
7535 East Hampden Avenue
Suite 425
Denver, Colorado 80231
(303) 743-0002

CAHEN ARCHITECTURAL GROUP P.C.
Copyright

5-31-07

LICENSED ARCHITECT — CRAIG I. CAHEN — No. C-27516 — STATE OF CALIFORNIA

These plans are an instrument of service and are the property of the Architect, and may not be duplicated, disclosed, or reproduced without the written consent of the Architect. Copyrights and Infringements will be enforced and prosecuted.

#404 SAN JOSE, CA
BUILDING REMODEL
CHUCKE CHEESE PIZZA RESTAURANT
1371 Kooser RD San Jose, CA 95118

CHUCKECHEESE'S

DATE	•	9/10/04
PROJ NO.	•	24943
DRAWN	•	JNL
CHECKED	•	CIC
ISSUED/REVISED	•	DATE
PERMIT		01/31/05
REVISION	02	10/10/05
REVISION	03	12/13/05
REVISION	04	04/10/06
DRAWING TITLE	•	
EXTERIOR ELEVATION		

A4.0